SYM	ZONE	REVISION RECORD	AUTHORITY	DATE
A	C6	ADD R63: RMP/4-2001	J.S.	07/91
B	A1,C1 D1,F1	CHANGE C21, C28, C35, C42 FROM CERC-106C TO CERC-474C	J.S.	07/91
D		RELEASED	J.S.	07/91
C		ECO #2101	J.S.	8/8/91

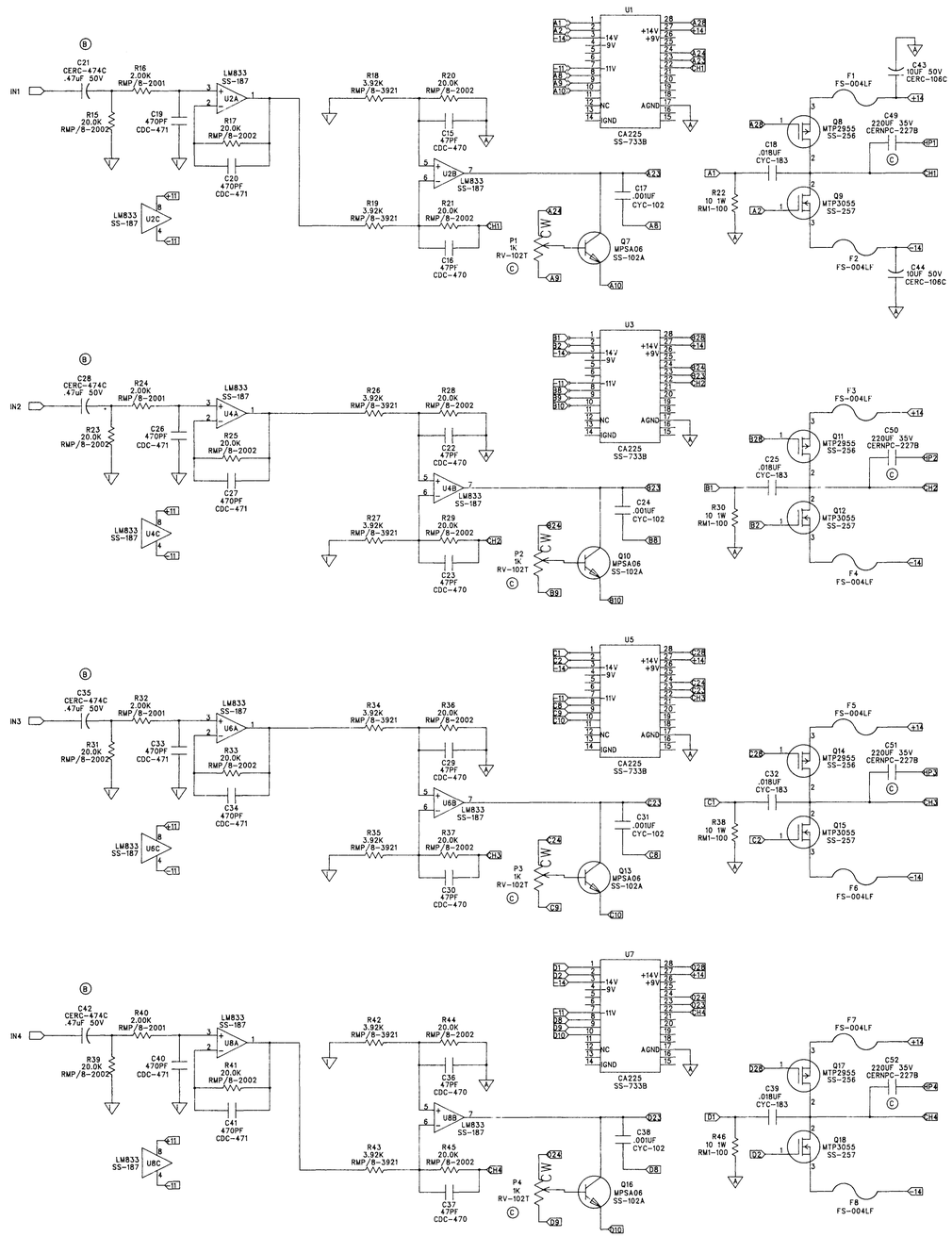

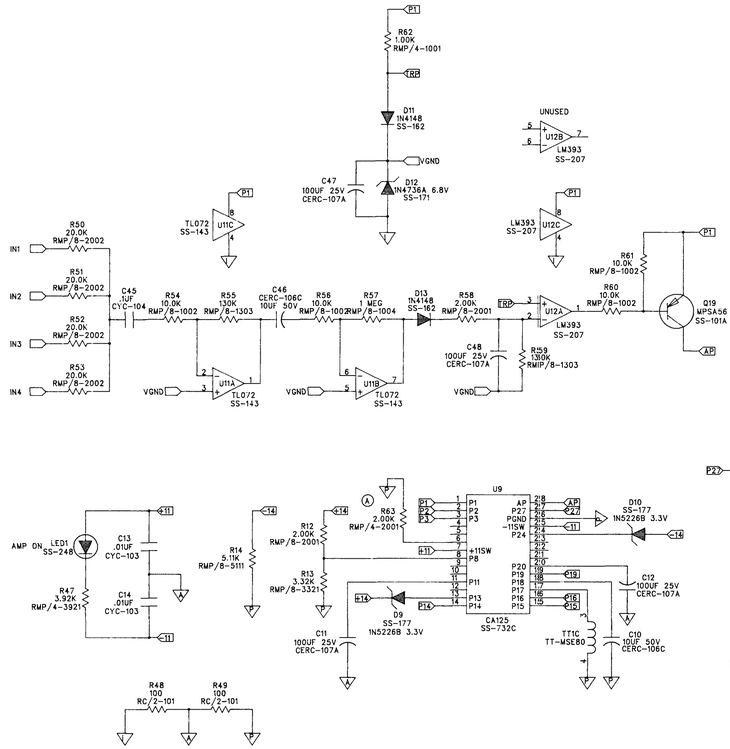

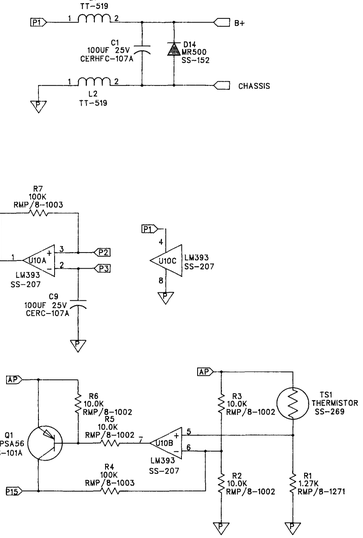

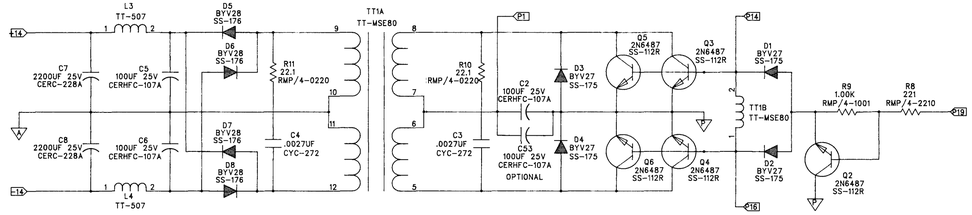

CONFIDENTIAL

© Copyright 19 91 Rockford Corporation. This drawing is the property of Rockford Corporation and embodies confidential information, trade secret information, and/or know-how which is the property of Rockford Corporation. By accepting this drawing, the recipient agrees not to provide, or otherwise make available, the drawing, or any information or know-how embodied therein, to any third party without prior written authorization.

DWN	SEAVER	05-21-91	ROCKFORD CORPORATION FOSGATE DIVISION TEMPE AZ
CHK	SEAVER	07-15-91	
ENGR	SEAVER	07-15-91	TITLE: DELCO AMP SCHEMATIC
APVD		8-13-91	
APVD			SIZE D SCALE NONE SHEET 1 REV C

ANY TECHNICAL QUESTIONS REGARDING THIS PRINT SHOULD BE REFERRED TO JOHN SEAVER (602) 967-3565 3130.

MATERIAL/FINISH: N/A

FILE NAME: SCHEM

PART NO.: SCH-003